谷景電子

Customer 客户：_____

Part No.
（客户料号）：_____

承　认　书

SPECIFICATION　FOR　APPROLVAL

品名：贴片功率电感器

规格：GCDS125 68uH ±20%

料号：GCDS125MT680

日期：2019.7.23

版本号：V1.0

Produced by (QC)	Checked (QC)	Approved by (QC)	Prepared by (Sales)	Accepted by (Customer)

苏州谷景电子有限公司

电话：0512-66715887　　65287179

传真：0512-65859232

网址：www.gujingcoil.com

地址:江苏省苏州市高新区宝带西路 1099 号汇金科技园 2 号楼 4 楼

E-mail：mark@gujingchina.com

Pb RoHS Compliant

更 改 记 录

版 本	更改日期	更改内容	更改页面	更改者	确认者
1.0	2019.7.23	发行			

谷景電子

1. 机械尺寸 Mechanical: (UNIT: mm)

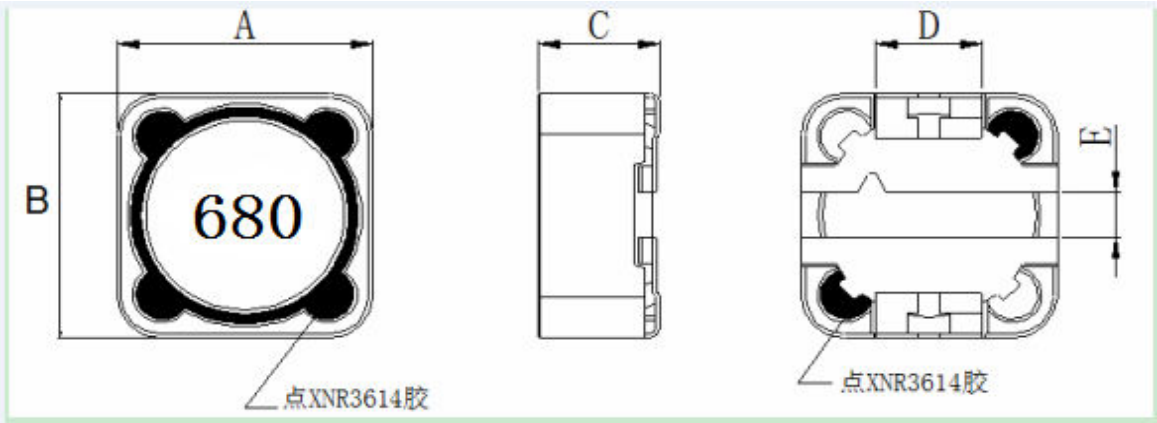

A: 12.3MAX　B: 12.3MAX　C:6.0MAX　D: 5.0 REF　E:2.0 REF

2. 检查条件

检查项目		规格	取样标准	检查方法
1.	L(μH)	68μH±20% at 1KHz/0.3V	GB/T2828.1-2003	CH1062
2.	RDC	185mΩ Max	〃	502BC
3.	IDC	2.5A (inductance drop;35% at last)	〃	CH1310+1062A

3. 原材料

NO.	名称	规格	单位	供应商	备注
1	DR CORE	TN40H　DRR-10×5.2-5.0 PAI		天通	或同等材料
2	RI CORE	TN40H　RI-12.1-5.0-10.7 SWE-B		天通	或同等材料
3	BASE	C-1200F P2		联诚	或同等材料
4	WIRE	P180		益利素勒	
5	TAPE				
6	TUBE	----------			
7	EPOXY	XNR3642 胶（贴 BASE）		长濑	或同等材料
		XNR3614 胶（灌封、点对角）		长濑	或同等材料
8	锡	SnCu		云南锡业	或同等材料
9	凡立水				
10	油墨			BON MARQUE	黑色
11	助焊剂	BST-909		博兰	或同等材料
12	酒精	----------		南马厂	
13	包装	GCDS125		德昌	或同等材料

4. BASE 面有缺口处为起线点.

5. 可靠性试验

5.1 MECHANICAL

TEST ITEM	SPECIFICATION	TEST DETAILS
Substrate bending	△ L/Lo≦±5% There shall be no mechanical damage or elec-trical damege.	The sample shall be soldered onto the printed circuit board in figure 1 and a load applied unitil the figure in the arrow direction is made approximately 3mm.(keep time 30 seconds) PCB dimension shall the page 7/9 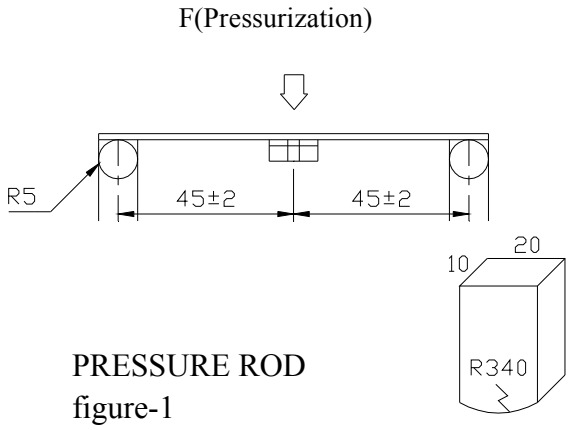 PRESSURE ROD figure-1
Vibration	△ L/Lo≦±5% There shall be no mechanical damage.	The sample shall be soldered onto the printed circuit board and when a vibration having an amplitude of 1.52mm and a frequency of from 10 to 55Hz/1 minute repeated should be applied to the 3 directions (X,Y,Z) for 2 hours each. (A total of 6 hours).
Solderability	New solder More than 90%	Flux (rosin, isopropyl alcohol{JIS-K-1522}) shall be coated over the whole of the sample before hard, the sample shall then be preheated for about 2 minutes in a temperature of 130 ～ 150 ℃ and after it has been immersed to a depth 0.5mm below for 3±0.2 seconds fully in molten solder M705 with a temperature of 245±5 ℃ . More than 90% of the electrode sections shall be couered with new solder smoothly when the sample is taken out of the solder bath.

5.1 MECHANICAL

TEST ITEM	SPECIFICATION	TEST DETAILS
Resistance to Soldering heat (reflow soldering)	There shall be no damage or problems.	Temperature profile of reflow soldering 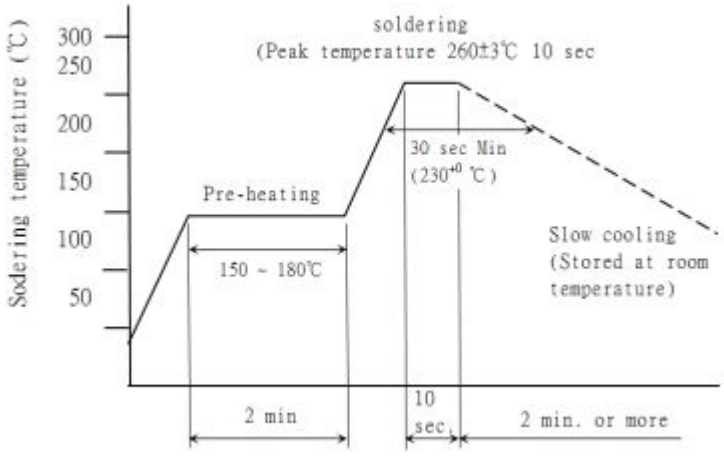 The specimen shall be passed through the reflow oven with the condition shown in the above profile for 1 time. The specimen shall be stored at standard atmospheric conditions for 1 hour, after which the measurement shall be made.

5.2 ELECTRICAL

TEST ITEM	SPECIFICATION	TEST DETAILS
Insulation resistance	There shall be no other damage or problems.	DC 100V voltage shall be applied across this sample of top surface and the terminal. The insulation resistance shall be more than $1 \times 10^8 \Omega$.
Dielectric Withstand voltage	There shall be no other damage or Problems.	AC 100V voltage shall be applied for 1 minute acrosset the top surface and the terminal of this sample.
Temperature characteristics	△L/L20℃ ≦ ± 10% 0～ 2000 ppm/℃	The test shall be performed after the sample has stabilized in an ambient temperature of - 20 to + 85℃,and the value calculated based on the value applicable in a normal temperature and narmal humidity shall be △L/L 20℃ ≦ ± 10%.

5.3 ENVIROMENT CHARACTERISTICS

<table>
<tr><th>TEST ITEM</th><th>SPECIFICATION</th><th>TEST DETAILS</th></tr>
<tr><td>High temperature storage</td><td>△ L/Lo≦±5%
There shall be no mechanical damage.</td><td>The sample shall be left for 96±4 hours in an atmospere with a temperature of 85±2℃ and a normal humidity.
Upon completion of the measurement shall be made after the sample has been left in a normal temperature and normal humidity for 1 hour.</td></tr>
<tr><td>Low temperature storage</td><td>△ L/Lo≦±5%
There shall be no mechanical damage.</td><td>The sample shall be left for 96±4 hours in an atmosphere with a temperature of -25±3℃.
Upon completion of the test, the measurement shall be made after the sample has been left in a normal temperature and normal humidity for 1 hour.</td></tr>
<tr><td>Change of Temperature</td><td>L/Lo≦±5%
There shall be no other dama-ge of problems</td><td>The sample shall be subject to 5 continuos cycles, such as shownin the table 2 below and then it shall be subjected to standard stmospheric conditions for 1 hour, after which measurement shall be made.
table 2
<table>
<tr><th></th><th>Temperature</th><th>Duration</th></tr>
<tr><td>1</td><td>－25±3℃
(Themostat No.1)</td><td>30 min.</td></tr>
<tr><td>2</td><td>Standard atmospheric</td><td>No.1→No.2</td></tr>
<tr><td>3</td><td>85±2℃
(Themostat No.2)</td><td>30 min.</td></tr>
<tr><td>4</td><td>Standard atmospheric</td><td>No.2→No.1</td></tr>
</table></td></tr>
<tr><td>Moisuture storage</td><td>△ L/Lo≦±5%
There shall be no mechanical damage.</td><td>The sample shall be left for 96±4 hours in a temperature of 40±2℃ and a humidity(RH) of 90～95%.
Upon completion of the test, the measurement shall be made after the sample has been left in a normal temperature and normal humidity more than 1 hour.</td></tr>
<tr><td colspan="3">Test conditions:
The sample shall be reflow soldered onto the printed circuit board in every test.</td></tr>
</table>

6 . 包装：

1）包装类型：　　编带装；

2）包装（编带装）尺寸:　■13″　盘　　□7″ 盘

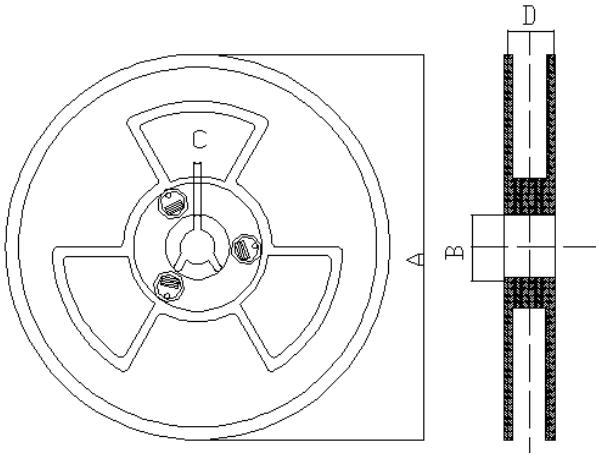

规格 尺寸	13″	7″
A	Φ330±2.0	Φ178±2.0
B	Φ90±2.0	
C	2.3	
D	21.5	

3) 包装方式:卷带包装 500PCS/卷、使用茶色自粘上带；

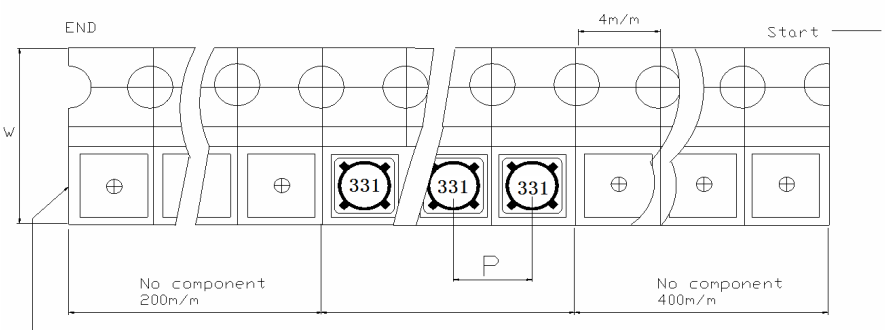

W	24
P	16